# Work Order ID 69809

*Thursday, May 19, 2011 2:16:58 PM*



**Item ID:** D412-702-301 **Accept** **Setup Start**

**Revision ID:** **Stop**

**Item Name:** Harness Assembly

**Start Date:** 5/20/2011 **Start Qty:** 1.00 **Cust Item ID:**

**Required Date:** 5/24/2011 **Req'd Qty:** 1.00 **Customer:**

**Reference:**

**Approvals:** **Process Plan:** UMF **Date:** 11-05-19 **Tooling:** _____ **Date:** _____ **Run Start**

**QC:** _____ **Date:** _____ **SPC (Y/N):** _____ **Date:** _____ **Stop**

| Sequence ID/ Work Center ID | Operation Description | Set Up/ Run Hours | Tool ID | Tool # | Plan Code | Accept Qty | Reject Qty | Reject Number | Insp. Stamp |
|---|---|---|---|---|---|---|---|---|---|

| Draw Nbr | Revision Nbr |
|---|---|
| DSI 9511 | A |
| ICA-D412-702 | Rev3 |

100 0.00

Small Fab **Memo** 0.00

Small Fab Assemble as per dwg ICA D412-702 p 110 de 125

11/05/19 (1)

110 QC5- Inspect part completeness to step on W/O 0.00

QC **Memo** 0.00

Quality Control

11/05/19

Dart Aerospace Ltd

| W/O: | | WORK ORDER CHANGES | | | | | |
|---|---|---|---|---|---|---|---|
| DATE | STEP | PROCEDURE CHANGE | By | Date | Qty | Approval Chief Eng / Prod Mgr | Approval QC Inspector |
| | | | | | | | |
| | | | | | | | |

**Part No:** _____ **PAR #:** _____ **Fault Category:** _____ **NCR:** Yes No **DQA:** _____ **Date:** _____

**Resolution:** _____ **Disposition:** _____ **QA: N/C Closed:** _____ **Date:** _____

| NCR: | | WORK ORDER NON-CONFORMANCE (NCR) | | | | | | |
|---|---|---|---|---|---|---|---|---|
| DATE | STEP | Description of NC Section A | Corrective Action Section B | | | Verification Section C | Approval Chief Eng | Approval QC Inspector |
| | | | Initial Chief Eng | Action Description Chief Eng | Sign & Date | | | |
| | | | | | | | | |
| | | | | | | | | |
| | | | | | | | | |

**NOTE:** Date & initial all entries

# Work Order ID 69809

*Thursday, May 19, 2011 2:16:58 PM*



**Item ID:** D412-702-301 **Accept** **Setup Start** **Stop**

**Revision ID:**

**Item Name:** Harness Assembly

**Start Date:** 5/20/2011 **Start Qty:** 1.00 **Cust Item ID:**

**Required Date:** 5/24/2011 **Req'd Qty:** 1.00 **Customer:**

**Reference:**

**Run Start** **Stop**

**Approvals:** **Process Plan:** _____ **Date:** _____ **Tooling:** _____ **Date:** _____

**QC:** _____ **Date:** _____ **SPC (Y/N):** _____ **Date:** _____

| Sequence ID/ Work Center ID | Operation Description | Set Up/ Run Hours | Tool ID | Tool # | Plan Code | Accept Qty | Reject Qty | Reject Number | Insp. Stamp |
|---|---|---|---|---|---|---|---|---|---|
| 120 | | 0.00 | | | | | | | |
| Packaging | **Memo** | 0.00 | | | | 11/5/19 | SP | | |
| Packaging | Identify with P/N & CHG# and pack for shipping as per PPP D412-702-301<br>CHG001<br>Location: 269<br>PPP Rev: _____ | | | | | | | | |
| 130 | QC21- Final Inspection - Work Order Release | 0.00 | | | | | | | |
| QC | **Memo** | 0.00 | | | | | 11/5/20 | | |
| Quality Control | | | | | | | | | |

CMF
11-05-19

Dart Aerospace Ltd

| W/O: | | WORK ORDER CHANGES | | | | | |
|---|---|---|---|---|---|---|---|
| DATE | STEP | PROCEDURE CHANGE | By | Date | Qty | Approval Chief Eng / Prod Mgr | Approval QC Inspector |
| | | | | | | | |
| | | | | | | | |

**Part No:** _____ **PAR #:** _____ **Fault Category:** _____ **NCR:** Yes No **DQA:** _____ **Date:** _____

**Resolution:** _____ **Disposition:** _____ **QA: N/C Closed:** _____ **Date:** _____

| NCR: | | WORK ORDER NON-CONFORMANCE (NCR) | | | | | | |
|---|---|---|---|---|---|---|---|---|
| DATE | STEP | Description of NC Section A | Corrective Action Section B | | | Verification Section C | Approval Chief Eng | Approval QC Inspector |
| | | | Initial Chief Eng | Action Description Chief Eng | Sign & Date | | | |
| | | | | | | | | |
| | | | | | | | | |
| | | | | | | | | |

**NOTE:** Date & initial all entries

# Picklist Print

*Thursday, May 19, 2011 2:16:55 PM*



**Work Order ID:** 69809

**Parent Item:** D412-702-301

**Parent Item Name:** Harness Assembly

**Start Date:** 5/20/2011 **Required Date:** 5/24/2011

**Start Qty:** 1.00 **Required Qty:** 1.00

**Comments:** IPP Rev:A new issue DD 10.04.30 verified:EC

| Component Item ID/ Item Name | Replacement Item ID | Mfg/ Purch | Bin Item | Primary Location | Last Location | Route Seq ID | Unit of Measure | Qty on Hand | Qty per Kit | Total Qty | Qty Issued | Date Issued | Status |
|---|---|---|---|---|---|---|---|---|---|---|---|---|---|
| D3573-7 | | Manufactured | No | | | 100 | Each | 7.0000 | 1 | 1 | | | |
| Adapter | | | | | | | | | | | | | |
| | | | | **Location** | | **Loc Qty** | | **Loc Code** | | | | | |
| | | | | GA | | 7 | | | | | | | |
| | | | | | 65253 | 7 | | | | 1 | | | |
| D4088-041 | | Manufactured | No | | | 100 | Each | 23.0000 | 1 | 1 | | | |
| Shoulder Harness | | | | | | | | | | | | | |
| | | | | **Location** | | **Loc Qty** | | **Loc Code** | | | | | |
| | | | | ST272A | | 23 | | | | | | | |
| | | | | | 68300 | 11 | | | | 1 | | | |
| | | | | | 68873 | 12 | | | | | | | |
| MS24693-S272 | | Purchased | No | | | 100 | Each | 91.0000 | 4 | 4 | | | |
| Screw | | | | | | | | | | | | | |
| | | | | **Location** | | **Loc Qty** | | **Loc Code** | | | | | |
| | | | | ST288 | | 91 | | | | | | | |
| | | | | | 116391 | 11 | | | | | | | |
| | | | | | 116737 | 30 | | | | 4 | | | |
| | | | | | 117677 | 50 | | | | | | | |
| AN960JD10LL | | Purchased | No | | | 100 | Each | 3,817.000 | 4 | 4 | | | |
| Washer | | | | | | | | | | | | | |
| | | | | **Location** | | **Loc Qty** | | **Loc Code** | | | | | |
| | | | | ST349 | | 3817 | | | | | | | |
| | | | | | 19085 | 472 | | | | | | | |
| | | | | | 19600 | 3345 | | | | 4 | | | |

Dart Aerospace Ltd

| W/O: | | WORK ORDER CHANGES | | | | | |
|---|---|---|---|---|---|---|---|
| DATE | STEP | PROCEDURE CHANGE | By | Date | Qty | Approval Chief Eng / Prod Mgr | Approval QC Inspector |
| | | | | | | | |
| | | | | | | | |

**Part No:** _____ **PAR #:** _____ **Fault Category:** _____ **NCR:** Yes No **DQA:** _____ **Date:** _____

**Resolution:** _____ **Disposition:** _____ **QA: N/C Closed:** _____ **Date:** _____

| NCR: | | WORK ORDER NON-CONFORMANCE (NCR) | | | | | | |
|---|---|---|---|---|---|---|---|---|
| DATE | STEP | Description of NC Section A | Corrective Action Section B | | | Verification Section C | Approval Chief Eng | Approval QC Inspector |
| | | | Initial Chief Eng | Action Description Chief Eng | Sign & Date | | | |
| | | | | | | | | |
| | | | | | | | | |
| | | | | | | | | |

**NOTE:** Date & initial all entries

# Picklist Print

*Thursday, May 19, 2011 2:16:55 PM*

**Work Order ID:** 69809

**Parent Item:** D412-702-301

**Parent Item Name:** Harness Assembly

**Start Date:** 5/20/2011 **Required Date:** 5/24/2011

**Start Qty:** 1.00 **Required Qty:** 1.00

| | | | | | | | | |
|---|---|---|---|---|---|---|---|---|
| MS21042L3 | Purchased | No | 100 | Each | 2,188.000 | 4 | 4 | 11/05/19 |
| Nut | | | | | | | | |

| Location | Loc Qty | Loc Code | |
|---|---|---|---|
| ST300 | 2188 | | |
| 116391 | 11 | | |
| 116540 | 211 | | 4 |
| 116549 | 766 | | |
| 117441 | 800 | | |
| 117601 | 400 | | |

Dart Aerospace Ltd

| W/O: | | WORK ORDER CHANGES | | | | | |
|---|---|---|---|---|---|---|---|
| DATE | STEP | PROCEDURE CHANGE | By | Date | Qty | Approval Chief Eng / Prod Mgr | Approval QC Inspector |
| | | | | | | | |
| | | | | | | | |

**Part No:** _____ **PAR #:** _____ **Fault Category:** _____ **NCR:** Yes No **DQA:** _____ **Date:** _____

**Resolution:** _____ **Disposition:** _____ **QA: N/C Closed:** _____ **Date:** _____

| NCR: | | WORK ORDER NON-CONFORMANCE (NCR) | | | | | | |
|---|---|---|---|---|---|---|---|---|
| DATE | STEP | Description of NC Section A | Corrective Action Section B | | | Verification Section C | Approval Chief Eng | Approval QC Inspector |
| | | | Initial Chief Eng | Action Description Chief Eng | Sign & Date | | | |
| | | | | | | | | |
| | | | | | | | | |
| | | | | | | | | |

**NOTE:** Date & initial all entries

H:\fFORMS\Quality Assurance\approved QA\NCRWO RevE

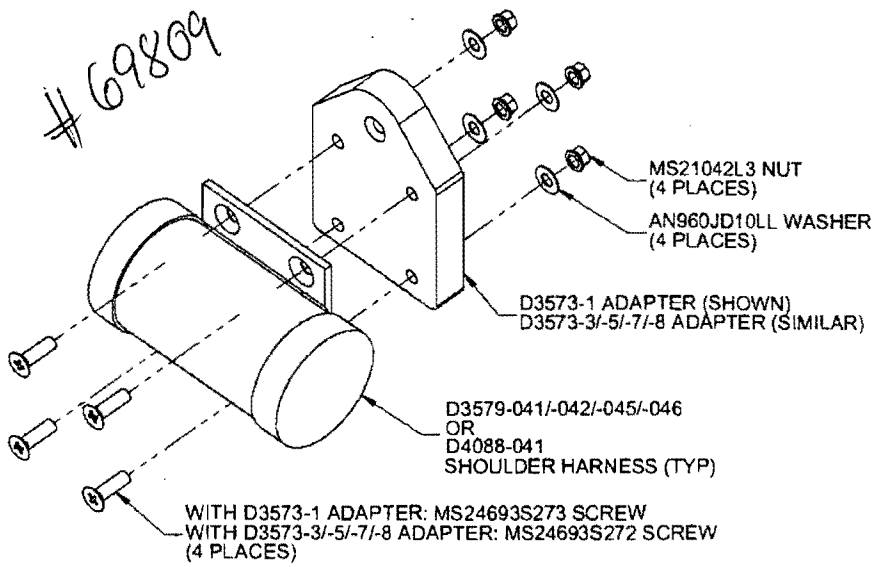


***DETAIL 'K'** D412-702-101A/-103A/-105A/-107A/-109A/-115A/-117A AND D412-702-101B/-103B/-105B/-107B/-109B/-115B/-117B OR -301/-303/-305/-307/-309/-315/-317 HARNESS ASSEMBLIES*

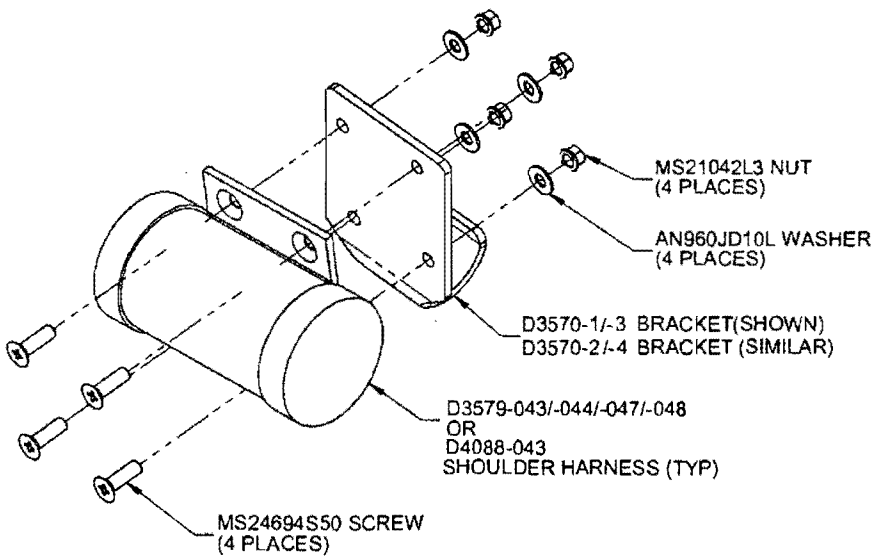


***DETAIL 'L'** D412-702-111A/-111B/-113A/-113B OR -311/-313/-321/-323 HARNESS ASSEMBLIES*

• COPYRIGHT © 2004 BY DART AEROSPACE LTD. •
THIS DOCUMENT IS PRIVATE AND CONFIDENTIAL AND IS SUPPLIED ON THE EXPRESS CONDITION THAT IT IS NOT TO BE USED FOR ANY PURPOSE OR COPIED OR COMMUNICATED TO ANY OTHER PERSON WITHOUT WRITTEN PERMISSION FROM DART AEROSPACE LTD.

Dart Aerospace Ltd

| W/O: | | WORK ORDER CHANGES | | | | | |
|---|---|---|---|---|---|---|---|
| DATE | STEP | PROCEDURE CHANGE | By | Date | Qty | Approval Chief Eng / Prod Mgr | Approval QC Inspector |
| | | | | | | | |
| | | | | | | | |

**Part No:** _____ **PAR #:** _____ **Fault Category:** _____ **NCR:** Yes No **DQA:** _____ **Date:** _____

**Resolution:** _____ **Disposition:** _____ **QA: N/C Closed:** _____ **Date:** _____

| NCR: | | WORK ORDER NON-CONFORMANCE (NCR) | | | | | | |
|---|---|---|---|---|---|---|---|---|
| DATE | STEP | Description of NC Section A | Corrective Action Section B | | | Verification Section C | Approval Chief Eng | Approval QC Inspector |
| | | | Initial Chief Eng | Action Description Chief Eng | Sign & Date | | | |
| | | | | | | | | |
| | | | | | | | | |
| | | | | | | | | |

**NOTE:** Date & initial all entries

H:\fFORMS\Quality Assurance\approved QA\NCRWO RevE